arXiv:cond-mat/0210612v3 [cond-mat.mes-hall] 19 Feb 2003

Scattering Theory of Mesoscopic Detectors

M. Büttiker and S. Pilgram
Dept. Phys. Théorique, Université de Genève,
24, quai Ernest-Ansermet, 1211 Genève 4, Switzerland

February 1, 2008

Abstract

We consider a two-level system coupled to a mesoscopic two-terminal conductor that acts as measuring device. As a convenient description of the conductor we introduce its scattering matrix. We show how its elements can be used to calculate the relaxation and decoherence rates of the two-level system. Special emphasis is laid on the charge screening in the conductor that becomes important in the many-channel limit. Finally we give some examples that illustrate charge screening in different limits.

The detection of quantum states by means of mesoscopic detectors is of fundamental importance from the point of view of quantum measurement theory. It is also important due to the recent interest in different schemes of quantum computation for which the read-out process must be a key step [1]. A detector, typically, has a back action [2] on the measured system and thus can also be used to introduce decoherence in a controlled way. Here we are concerned with a simple prototype of a detector that consists of a mesoscopic conductor capacitively coupled to the state of a nearby quantum system (see Fig. (1)). The most basic quantum system is a two state system here taken to be two mesoscopic quantum dots weakly coupled to each other.

Recent experiments demonstrated elegantly the effect of a detector on a phase coherent mesoscopic system [3, 4, 5, 6]. Different aspects of weak measurement were addressed in several theoretical discussions: the relation between detector noise and decoherence [7, 8], their connection to measurement

time [9] and to scattering theory [3, 10, 11]. Master equation approaches have been used to study the time evolution of system and detector [12, 13]. These equations have been refined to describe also conditional evolution depending on the outcome of the measurement [14, 15]. Tunnel contacts and single electron transistors have been identified as candidates for efficient measurement devices [16].

For such devices it is natural to ask whether their speed can be improved by increasing their size. One is tempted to expect that the sensitivity of a detector grows when we add more and more conductance channels. The bigger the detector the less the uncertainty due to the shot noise compared to the signal of the detector. However, this effect competes with the charge screening between different conductance channels through the detector that grows as well with increasing channel number. This screening tends to suppress the sensitivity of the detector.

Charge screening is often neglected in mesoscopic physics. Typically investigated quantities are dc-currents and low frequency current noises which are insensitive to displacement currents in the system. However, there are quantities that depend crucially on screening: ac-conductance measurements pick up screening currents in the system: At contacts which permit the exchange of particles these become noticeable only if the frequency gets of the order of the inverse dwell time in the system; at nearby capacitors only displacement currents contribute and can be measured at arbitrary low frequencies [17]. Furthermore non-linear current-voltage characteristics depend on the charge distribution inside mesoscopic conductors [18]. In the case of mesoscopic detectors the quantity of interest is the charge fluctuations in the detector. Like the currents induced into a nearby gate this quantity is subject to screening already in the low-frequency limit! Earlier work focused on the effect of screening on the decoherence rate induced by the measurement process under the assumptions that both detector and system are described by a scattering matrix [11, 19]. It is the aim of this work to investigate the effect of charge screening in the detector on the DD system shown in Fig. 1.

1 The model

The model we consider is shown in Fig. 1. A double dot (DD) plays the role of a two-level system: The topmost electron in the DD can either occupy the

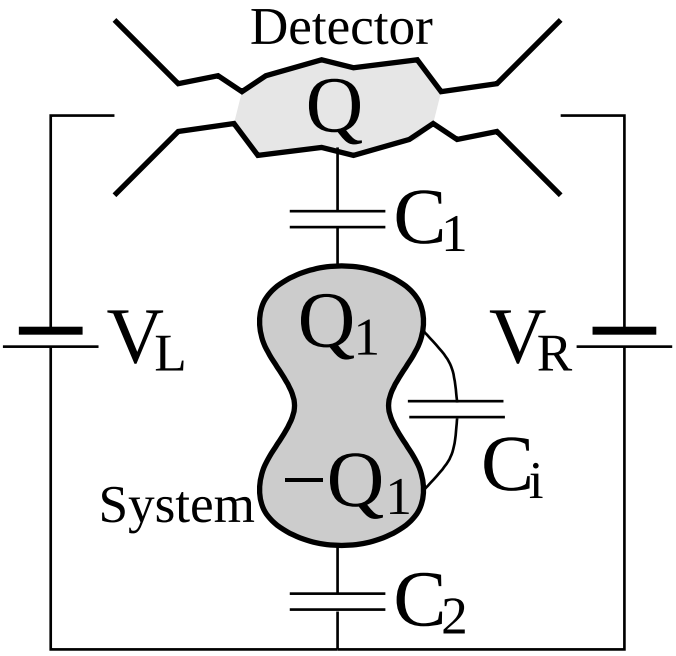

Figure 1: A mesoscopic detector is capacitively coupled to one side of a double dot.

upper or the lower dot. A mesoscopic two-terminal conductor (MC) serves as a detector: its conductance is sensitive to the charge on the upper dot. A set of capacitances C_1, C_2, C_i describes the coupling between charges of system Q_1 and detector Q (we often use the capacitance in series $C^{-1} = C_1^{-1} + C_2^{-1} + C_i^{-1}$). Single electron movement in such a setup was recently measured [6].

Three different time scales describe the interaction of system and detector: In the system we distinguish the thermal *relaxation* to an equilibrium distribution (described by a rate Γ_{rel}) and the often much faster *decoherence* of superpositions of states in the upper and lower dot (described by a rate Γ_{dec}). The decoherence depends as well on temperature kT as on the voltage difference $e|V|$ between the terminals of the detector. Applying such a voltage difference permits to measure the state of the system which leads to

additional decoherence. The *measurement* process takes some time which is needed to overcome the uncertainty due to shot noise in the detector and is characterized by a third rate Γ_m. The decoherence rate Γ_{dec} at zero temperature is intimately related to the measurement rate Γ_m and satisfies the inequality $\Gamma_{dec} \geq \Gamma_m$ [13, 20]. An important measure of the quality of the detector is the efficiency $\eta = \Gamma_m/\Gamma_{dec}$. Ideally one would like to find detectors with an efficiency 1.

Even in the single channel case an ideal detector $\eta = 1$ is found only under some special conditions (time-reversal and space-inversion symmetry [20]). It is shown in Ref. [21] that an efficient multi-channel detector is subject to a *third* condition that links sensitivities and shot noises of different channels $(dT_n/dU)/(R_nT_n) = \text{const.}$ where $T_n = 1 - R_n$ denotes the transmission probability of channel n. A violation of this condition can reduce the efficiency of multichannel detectors η drastically in the presence of disorder. In general a large mesoscopic detector is therefore not much faster than a single channel detector.

In this publication we concentrate on another property that lowers the detection speed of multichannel detectors. The charge fluctuation in one channel can be screened by the charge of other channels. This effect will depend strongly on the geometry of the detector. In order to be able to describe a large variety of detectors we therefore represent the MC by a scattering matrix $s_{\alpha\beta}$ that connects in- and outgoing states (α, β label left and right reservoir). This enables us to treat multi-channel MCs with arbitrary transmission probabilities T_n. We only consider the case of weak coupling between MC and DD and may thus use a standard master equation (Bloch-Redfield approach [22]) in lowest order perturbation theory to study the evolution of the reduced density matrix of the DD. On this level of approximation the dynamics of the DD is influenced only via the charge fluctuation spectrum S_{QQ} of the MC. At low frequencies this spectrum is fully characterized by a generalized Wigner-Smith time delay matrix [23] ($\beta\gamma$ label the reservoirs)

$$N_{\beta\gamma} = \frac{1}{2\pi i} \sum_{\alpha} s^{\dagger}_{\beta\alpha} \frac{ds_{\gamma\alpha}}{dU}. \tag{1}$$

The derivative d/dU is taken with respect to the electrostatic potential in the MC. The following constants that appear also in the context of ac-transport

[17] describe the geometry of the detector (e denotes the electron charge)

$$D = e^2 \mathrm{Tr} N, \qquad C_\mu^{-1} = C^{-1} + D^{-1},$$
$$R_q = \frac{1}{2}\frac{(\mathrm{Tr} N^2)}{(\mathrm{Tr} N)^2}, \quad R_v = \frac{(\mathrm{Tr} N_{12} N_{21})}{(\mathrm{Tr} N)^2}, \quad R_m = \frac{1}{4\pi^2}\frac{(\sum \frac{dT_n}{dU})^2}{(\mathrm{Tr} N)^2 (\sum R_n T_n)}. \tag{2}$$

D corresponds to the density of states at Fermi energy in the scattering region, C_μ is an effective electrochemical capacitance that characterizes the strength of interaction, R_q expresses the equilibrium contribution [17] to the charge fluctuation spectrum S_{QQ}, and R_v the non-equilibrium contribution [11, 23]. The fifth constant R_m is of different origin [9] and cannot be expressed by matrix (1) only. It describes the ratio of detector sensitivity and shot noise in the presence of screening.

The two-level system is conventionally represented by the Hamiltonian $\hat{H}_{DD} = \frac{\epsilon}{2}\hat{\sigma}_z + \frac{\Delta}{2}\hat{\sigma}_x$ where $\hat{\sigma}_i$ denote Pauli matrices. The energy difference between upper and lower dot is ϵ and Δ accounts for tunneling between the dots. The full level splitting is thus $\Omega = \sqrt{\epsilon^2 + \Delta^2}$.

2 Relaxation and decoherence rates

The relaxation, decoherence and measurement rates are given by the following expressions [21] (here and in the following we set $\hbar \equiv 1$):

$$\Gamma_{rel} = 2\pi \frac{\Delta^2}{\Omega^2}\left(\frac{C_\mu}{C_i}\right)^2 R_q \frac{\Omega}{2}\coth\frac{\Omega}{2kT}, \tag{3}$$

$$\Gamma_{dec} = 2\pi \frac{\epsilon^2}{\Omega^2}\left(\frac{C_\mu}{C_i}\right)^2 (R_q kT + R_v e|V|) + \Gamma_{rel}/2, \tag{4}$$

$$\Gamma_m = 2\pi \left(\frac{C_\mu}{C_i}\right)^2 R_m e|V|. \tag{5}$$

They have formally the same appearance as the rates given in [13]. The geometric structure of the detector is contained in the five parameters given in (2). In the following we analyze the behavior of these parameters to discuss the screening properties of the detector.

The parameter R_q does not exceed the range $1/2 > R_q > 1/2N$ where N is the dimension of the scattering matrix. This demonstrates that the relaxation and decoherence rates $\Gamma_{rel}, \Gamma_{dec}$ do not simply scale with the number of channels through the system. The multichannel result for the relaxation and decoherence rates cannot be obtained as a sum of rates due to each channel. The constants R_q and R_v are renormalized by a denominator $(\mathrm{Tr}N)^2$ depending on all channels. This denominator originates from screening. For a large number N of open channels R_q behaves as $1/N$ whereas the electrochemical capacitance $C_\mu \to C$ tends to a constant. The constant R_v decreases also like $1/N$. We find therefore the somewhat surprising result that relaxation and decoherence decrease in the large channel limit. This result is a consequence of screening in the MC which reduces the charge fluctuations with increasing channel number N.

3 Coulomb interaction and screening

We briefly explain the derivation of our results. The Coulomb Hamiltonian of our model contains three terms

$$\hat{H}_C = \frac{(\hat{Q}_1 - \bar{Q}_0)^2}{2C_i} + \frac{\hat{Q}_1\hat{Q}}{C_i} + \frac{\hat{Q}^2}{2C}. \tag{6}$$

Its first term contributes to the level splitting of the DD ($\bar{Q}_0$ is a background charge depending on the applied voltage $(V_L + V_R)/2$). The charging energy $e^2/2C_i$ must be large compared to $kT, e|V|$ to allow us to consider only two levels of the DD. The second term $\hat{Q}_1\hat{Q}/C_i$ couples system and detector. To derive a master equation for the reduced density matrix we assume weak coupling and treat this term perturbatively. We apply a Markov approximation which is strictly speaking only valid at long time scales (compared to the correlation time of the detector). This permits us to consider only the low-frequency matrix elements of the charge operator that are given by the Wigner-Smith matrix (1). The third term affects the fluctuation spectrum $S_{QQ} = \int_{-\infty}^{+\infty} dt \mathrm{Re}\langle\hat{Q}(t)\hat{Q}(0)\rangle e^{i\omega t}$ of the charge operator $\hat{Q}$. In contrast to earlier work (with the exception of Ref. [11]) we do not completely disregard this term, but include it on the level of RPA. This allows us to treat screening in a Gaussian approximation valid for geometries in which Coulomb blockade effects are weak.

To get insight into the fluctuation spectrum, we study the time evolution of the charge $\hat{Q}$ on the MC within RPA. This charge is composed of two components: the bare charge $\hat{Q}_b$ that arises from the noninteracting problem and the screening charge which is a response to the self-consistent potential $\hat{U}$ on the MC. We therefore have in frequency representation

$$\hat{Q} = \hat{Q}_b - D(\omega)\hat{U}, \qquad \hat{Q} = C\hat{U} - \frac{C}{C_i}\hat{Q}_1. \tag{7}$$

In the first equation, $D = -\partial\langle\hat{Q}\rangle/\partial U$ is the linear response function. The second equation expresses the self-consistency condition for the potential $\hat{U}$. These two equations can be combined by eliminating the potential $\hat{U}$. The total charge on the MC is found to be

$$\hat{Q} = (1 + D(\omega)/C)^{-1}\left(\hat{Q}_b - \frac{C}{C_i}\hat{Q}_1\right). \tag{8}$$

This result shows nicely the two possible effects of the random phase approximation. On the one hand, the prefactor $(1 + D(\omega)/C)^{-1}$ reduces the fluctuations of the bare charge $\hat{Q}_b$ which is compensated partially by a screening charge. On the other hand, we get a back action of the charge $\hat{Q}_1$ of the upper dot on the charge $\hat{Q}$ in the MC. However, this back action is small by a factor C/C_i and can be omitted in second order perturbation theory.

4 Examples

The examples of this section are not meant to model the geometry of a realistic measuring apparatus. But they demonstrate nicely the influence of the geometry on the speed and efficiency of the measuring process.

As a first generic example we discuss a **short quantum point contact** which is defined by two sharp barriers of distance ℓ. Its potential is given by $V(x, y, z) = Z(z) + Y(x, y)$ with

$$Z(z) = (1/m)[v\delta(z + \ell/2) + w\delta(z - \ell/2)]. \tag{9}$$

Note that this potential violates inversion symmetry for $v \neq w$. For convenience we introduce the following parameters: the wave vector $k_F = \sqrt{2mE_F}$ where m is the effective mass of the electron and E_F the Fermi energy. We

consider the limit of a MC much shorter than the Fermi wave length $\ell \ll \lambda_F$. Using the general formula (1) we calculate the density of state matrix (we set $\hbar \equiv 1$)

$$N = \frac{m\ell}{2\pi k_F}\frac{1}{k_F^2+(v+w)^2}\begin{pmatrix} k_F^2+2w^2 & 2vw+ik_F(v-w) \\ 2vw-ik_F(v-w) & k_F^2+2v^2 \end{pmatrix}. \tag{10}$$

It is now straightforward to obtain the measurement efficiency of the MC at zero temperature

$$\eta = \frac{\Gamma_m}{\Gamma_{dec}} = \frac{R_m}{R_v} = \frac{v^2w^2}{v^2w^2+k_F^2(v-w)^2/4} < 1. \tag{11}$$

For an asymmetric MC with $v \neq w$ the efficiency is suboptimal.

For a **long quantum point contact** with $\lambda_F \ll \ell$ charge screening gets effective. The constants R_q and R_v that determine the relaxation and decoherence rates then decrease with increasing number of open channels N. We illustrate this effect using the following toy potential

$$Z(z) = \frac{V_0}{\cosh^2 \alpha z}. \tag{12}$$

Its scattering matrix can be found in [24]. To get the full density of state matrix (1) we replace the potential derivative d/dU in (1) by a parametric derivative d/dV_0. The elements of (1) can be expressed by digamma-functions. As a confining potential we choose $Y = m\omega_y^2 y^2/2$. As in a two-dimensional electron gas only the lowest mode in z-direction is occupied. Fig. 2 compares the cases of ineffective charge screening $D \ll C$ and effective screening $D \gg C$. It shows the decoherence (measurement) rate at zero temperature kT and finite bias $e|V|$ depending on the number of open channels through the constriction. We change this number by varying the confinement frequency ω_y. The decoherence rate reaches maximal values if one transmission channel n is half-open $T_n = 1/2$. This corresponds to a maximum in the sensitivity dT_n/dV_0. In the case of ineffective screening the decoherence rate does not depend on the number of open channels, whereas screening reduces decoherence in the case of many open channels.

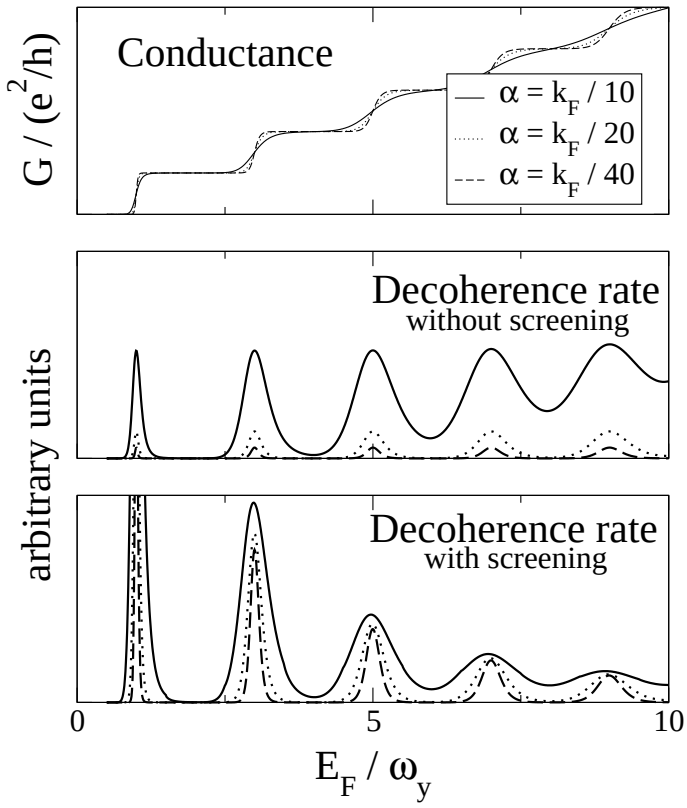

Figure 2: The effect of screening on the decoherence rate Γ_{dec} at zero temperature kT and finite voltage bias $e|V|$ (see text).

5 Conclusions

In this work we have investigated the weak measurement of a two state system (a double quantum dot) capacitively coupled to a mesoscopic conductor. We have presented expressions for the relaxation rate, the decoherence rate and the measurement rate in terms of capacitance coefficients and in terms of potential derivatives of the scattering matrix. The discussion illustrates that scattering theory is useful not only for the discussion of dc-transport processes in mesoscopic physics but in fact has a much wider range of applicability. We have emphasized screening in the detector: as illustrated in

Fig. 2 the decoherence rate and similarly the relaxation and measurement rate) are rappidly reduced with increasing channel number. Our discussion is based only on a single fluctuating potential in the detector but in principle a refined calculation which takes into account a more realistic potential distribution is possible [25].

This work was supported by the Swiss National Science Foundation.

Note added in proof: Recently an instructive, information theoretical discussion of the problem treated in this work was provided by Clerk, Girvin, and Stone [26].

References

[1] For recent experimental advances in the read-out of dynamic states see: D. Vion, A. Aassime, A. Cottet, P. Joyez, H. Pothier, C. Urbina, D. Esteve, and M. H. Devoret, Science **296**, 886 (2002). Y. Yu, S. Han, X. Chu, S.-I. Chu, Z. Wang, Science **296**, 889 (2002); Y. Nakamura, Yu. A. Pashkin, and J. S. Tsai, Nature (London) **398**, 357 (2001).

[2] Exceptions are quantum non-demolition measurements. For a recent proposal see: D. V. Averin, Phys. Rev. Lett. **88**, 207901 (2002).

[3] E. Buks, R. Schuster, M. Heiblum, D. Mahalu, and V. Umansky, Nature **391**, 871 (1998).

[4] D. Sprinzak, E. Buks, M. Heiblum, and H. Shtrikman, Phys. Rev. Lett. **84**, 5820 (2000).

[5] M. Field, C. G. Smith, M. Pepper, D. A. Ritchie, J. E. F. Frost, G. A. C. Jones, and D. G. Hasko, Phys. Rev. Lett. **70**, 1311 (1993).

[6] C. G. Smith, S. Gardelis, J. Cooper, D. A. Ritchie, E. H. Linfield, Y. Jin, H. Launois, Physica E **12**, 830 (2002).

[7] Y. Levinson, Europhys. Lett. **39**, 299 (1997).

[8] A. Silva and S. Levit, Phys. Rev. B **63**, 201309(R) (2001).

[9] I. L. Aleiner, N. S. Wingreen, and Y. Meir, Phys. Rev. Lett. **79**, 3740 (1997).

[10] R. A. Harris and L. Stodolsky, Phys. Lett. B **116**, 464 (1982).

[11] M. Büttiker and A. M. Martin, Phys. Rev. B **61**, 2737 (2000).

[12] S. A. Gurvitz, Phys. Rev. B **56**, 15215 (1997).

[13] Y. Makhlin, G. Schön, and A. Schnirman, Rev. Mod. Phys. **73**, 357 (2001).

[14] A. N. Korotkov, Phys. Rev. B **63**, 115403 (2001).

[15] H. S. Goan and G. J. Milburn, Phys. Rev. B **64**, 235307 (2001).

[16] D. V. Averin, cond-mat/0010052 (2000).

[17] M. Büttiker, H. Thomas, and A. Prêtre, Phys. Lett. A **180**, 364 (1993).

[18] T. Christen and M. Büttiker, Europhys. Lett. **35**, 523 (1996).

[19] M. Büttiker, in "Quantum Mesoscopic Phenomena and Mesoscopic Devices", edited by I. O. Kulik and R. Ellialtioglu, (Kluwer, Academic Publishers, Dordrecht, 2000). Vol. 559, p. 211. cond-mat/9911188

[20] A. N. Korotkov and D. Averin, Phys. Rev. B **64**, 165310 (2001).

[21] S. Pilgram and M. Büttiker, Phys. Rev. Lett. **89**, 200401 (2002).

[22] H. J. Carmichael, *Statistical Methods in Quantum Optics 1, Master Equations and Fokker-Planck Equations*, (Springer, Berlin 1999).

[23] M. H. Pedersen, S. A. van Langen, and M. Büttiker, Phys. Rev. B **57**, 1838 (1998).

[24] L. D. Landau and E. M. Lifshitz, *Course of Theoretical Physics*, (Pergamon Press, Oxford 1977). Vol. **3**, §25.

[25] A. M. Martin and M. Büttiker, Phys. Rev. Lett. **84**, 3386 (2000).

[26] A. A. Clerk, S. M. Girvin, A. D. Stone, cond-mat/0211001 (2002).